烙克赛克保留所有权利。未经授权严禁复制，
使用以及向第三方泄漏。

MATERIAL ACID PROOF STAINLESS STEEL

MATERIAL MILD STEEL
HOT DIPPED GALVANIZED ACC, TO ISO 1461

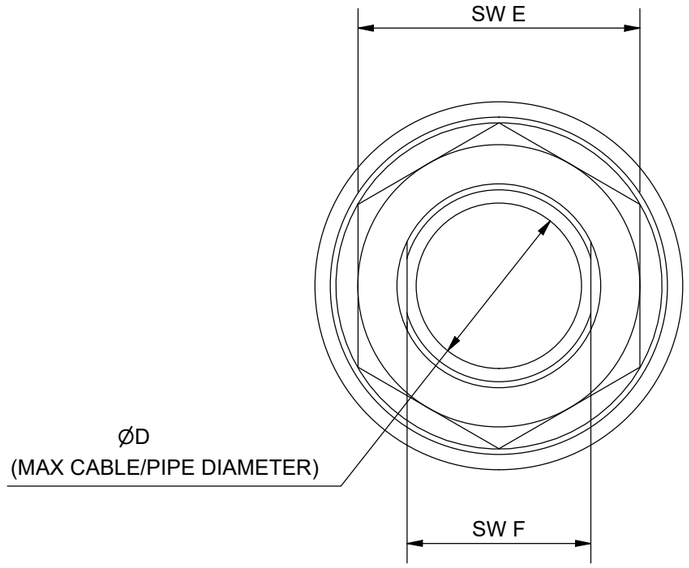

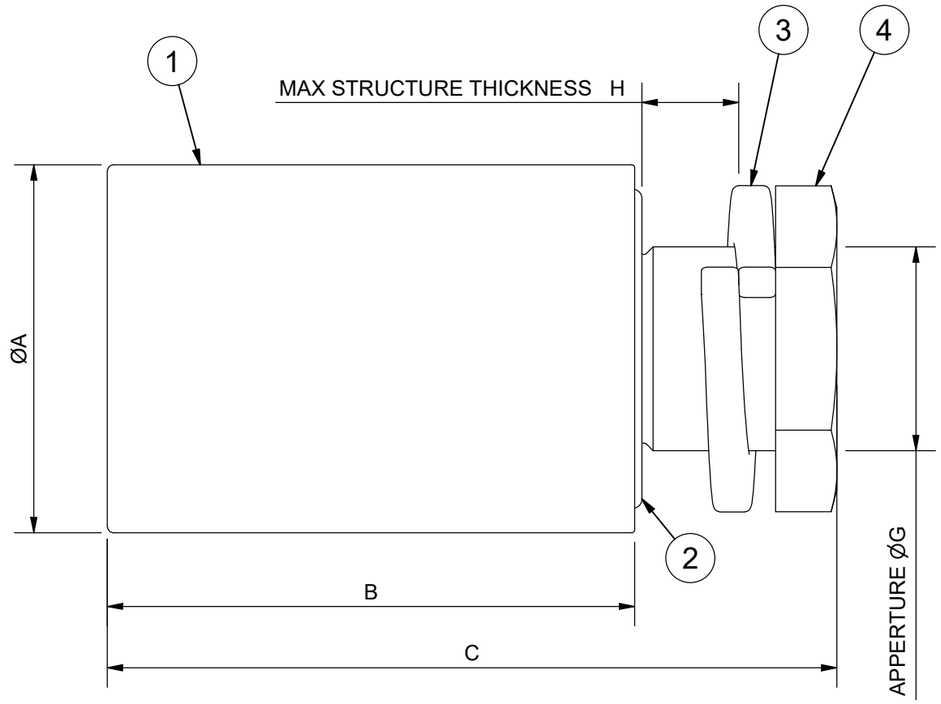

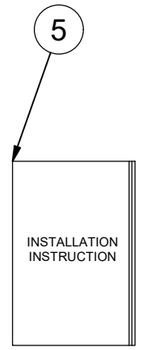

TYPE	A (mm)	B (mm)	C (mm)	D (mm)	E (mm)	F (mm)	G (mm)	H (mm)
SLA 25	33	47	77	13	30	17	21-22	15
SLA 31	45	55	87	25	46	30	34 ± 0.5	15
SLA 50	60	86	119	25	45	30	34-40	15
SLA 75	85	86	122	34	50	38	42-49	15

D

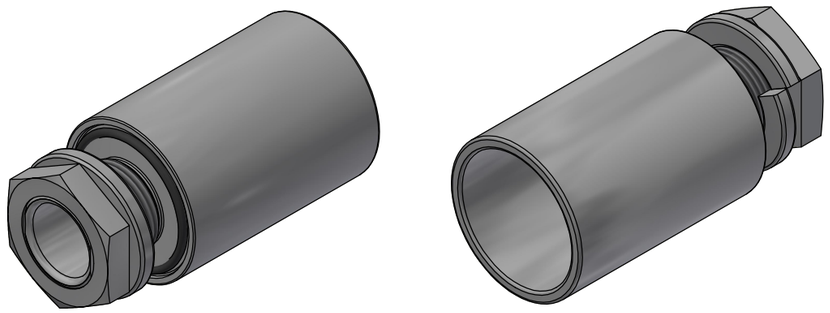

ITEM	QTY	Designation	Specification	Weight
5	1	INSTALLATION INSTRUCTION		
4	1	NUT		
3	1	SPRING WASHER		
2	1	O RING		
1	1	SLEEVE		

General tolerances used for manufacturing shown in document DOC-002180

Designed by/date: xx-benlun 2015-11-25
Latest save date: 2025-05-06
Format: A3
Scale:
Sheet no: 1 / 1
TotWeight: -

Roxtec
www.roxtec.com

Title: SLA SLEEVES
SLA 25-75

Projection method

Restricted due to: Information drawing
Drawing number: S1508276
Rev: D

Rev	Type of revision	Date	Sign
D	TABLE CORRECTED	2025-05-06	se-noafra

Rev 3.1

All rights reserved. Unauthorized reproduction, use
or disclosure to third parties is strictly forbidden

Information drawings show general design and nominal dimensions if not else stated